westfieldfasteners.co.uk
+44 (0)1844 201133
+44 (0)1844 202416
enquiries@westfieldfasteners.co.uk

Slotted Round Nuts for hook spanner DIN 1804

Slotted Round Nuts manufactured to DIN 1804. A nut requiring the use of a C Spanner (DIN 1810) or Hook Spanner. One surface of the nut protrudes and should be used as a mating surface.

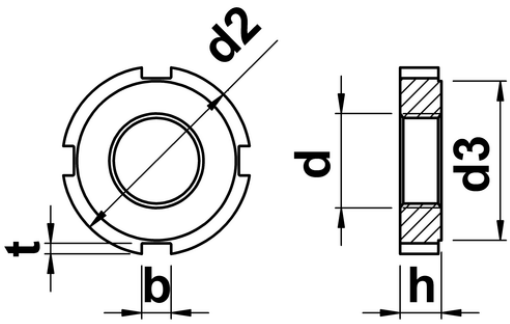

d	thread pitch	d2	d3	b	h	t
M12	1.50	28	23	5	6	2.0
M14	1.50	30	25	5	7	2.0
M16	1.50	32	27	5	7	2.0
M18	1.50	34	28	6	8	2.5
M20	1.50	36	30	6	8	2.5
M22	1.50	40	34	6	9	2.5
M24	1.50	42	36	6	9	2.5
M26	1.50	45	38	7	10	3.0
M28	1.50	50	43	7	10	3.0
M30	1.50	50	43	7	10	3.0
M32	1.50	52	45	7	11	3.0
M35	1.50	55	48	7	11	3.0
M38	1.50	58	50	8	11	3.5
M40	1.50	62	54	8	12	3.5
M42	1.50	62	54	8	12	3.5
M45	1.50	68	60	8	12	3.5
M48	1.50	75	67	8	13	3.5
M50	1.50	75	67	8	13	3.5
M52	1.50	80	70	10	13	4.0

d	thread pitch	d2	d3	b	h	t
M55	1.50	80	70	10	13	4.0
M58	1.50	90	80	10	13	4.0
M60	1.50	90	90	10	13	4.0
M62	1.50	95	85	10	14	4.0
M65	1.50	95	85	10	14	4.0
M68	1.50	100	90	10	14	4.0
M70	1.50	100	90	10	14	4.0